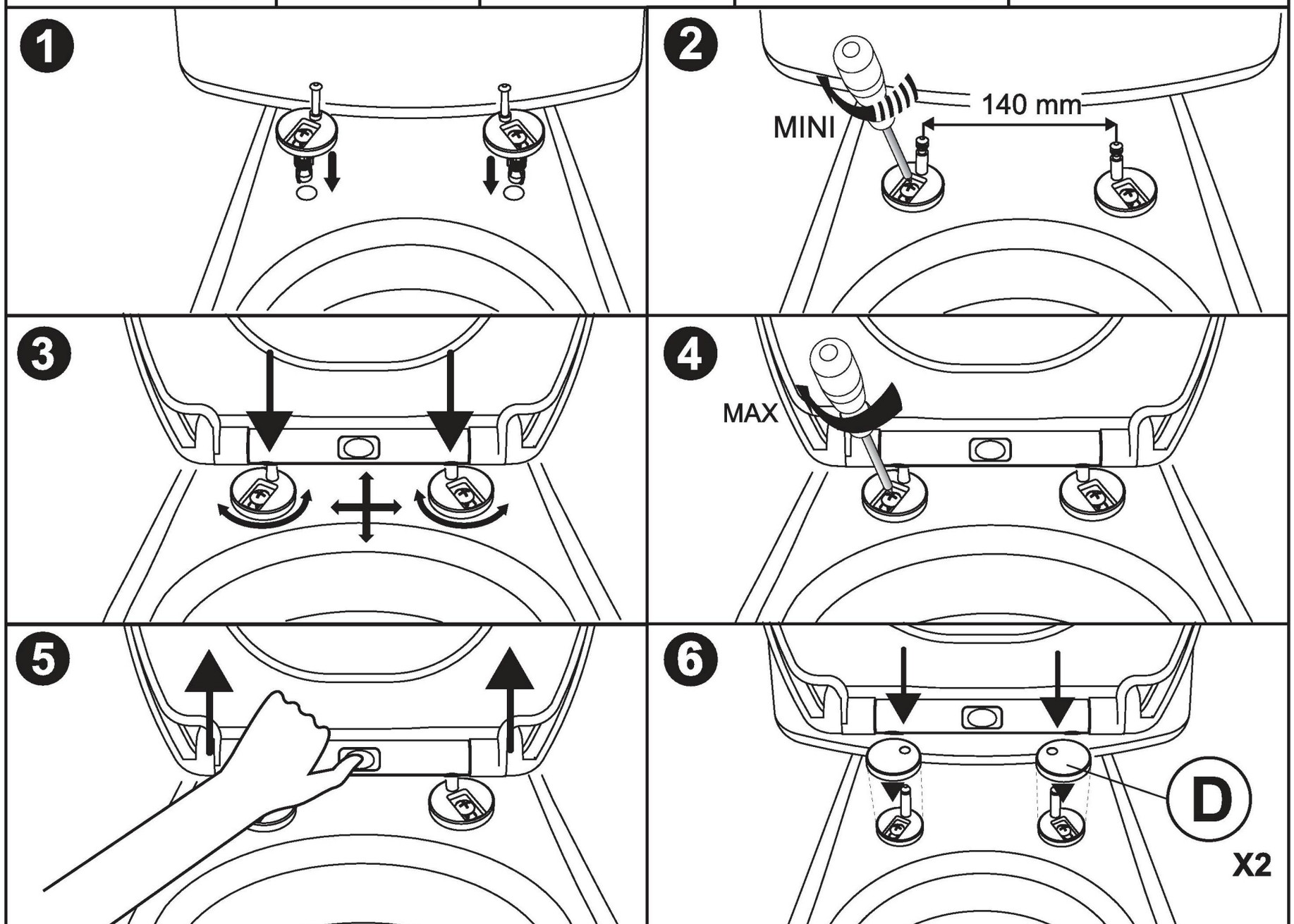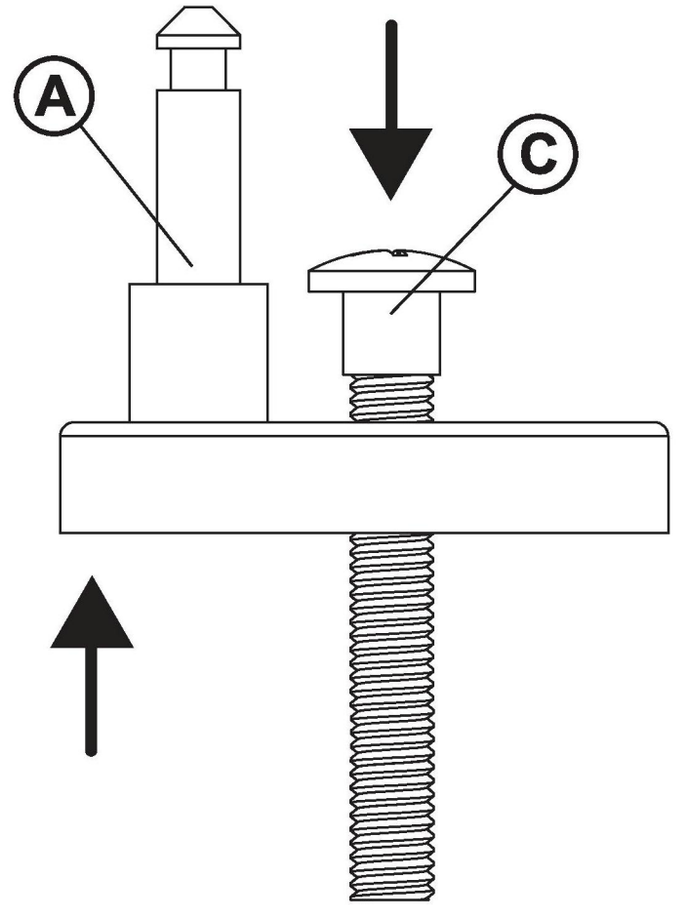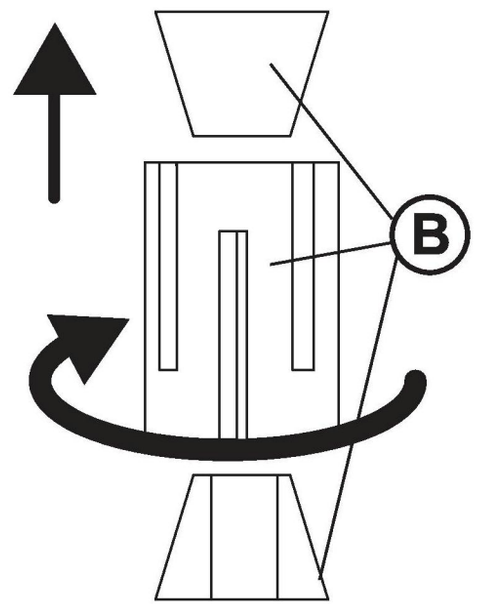A	B	C	D	
X2	X2	X2	X2